ПЛИТА ЭЛЕКТРИЧЕСКАЯ 6 КОНФОРОЧНАЯ 900 СЕРИИ TATRA TER.129F

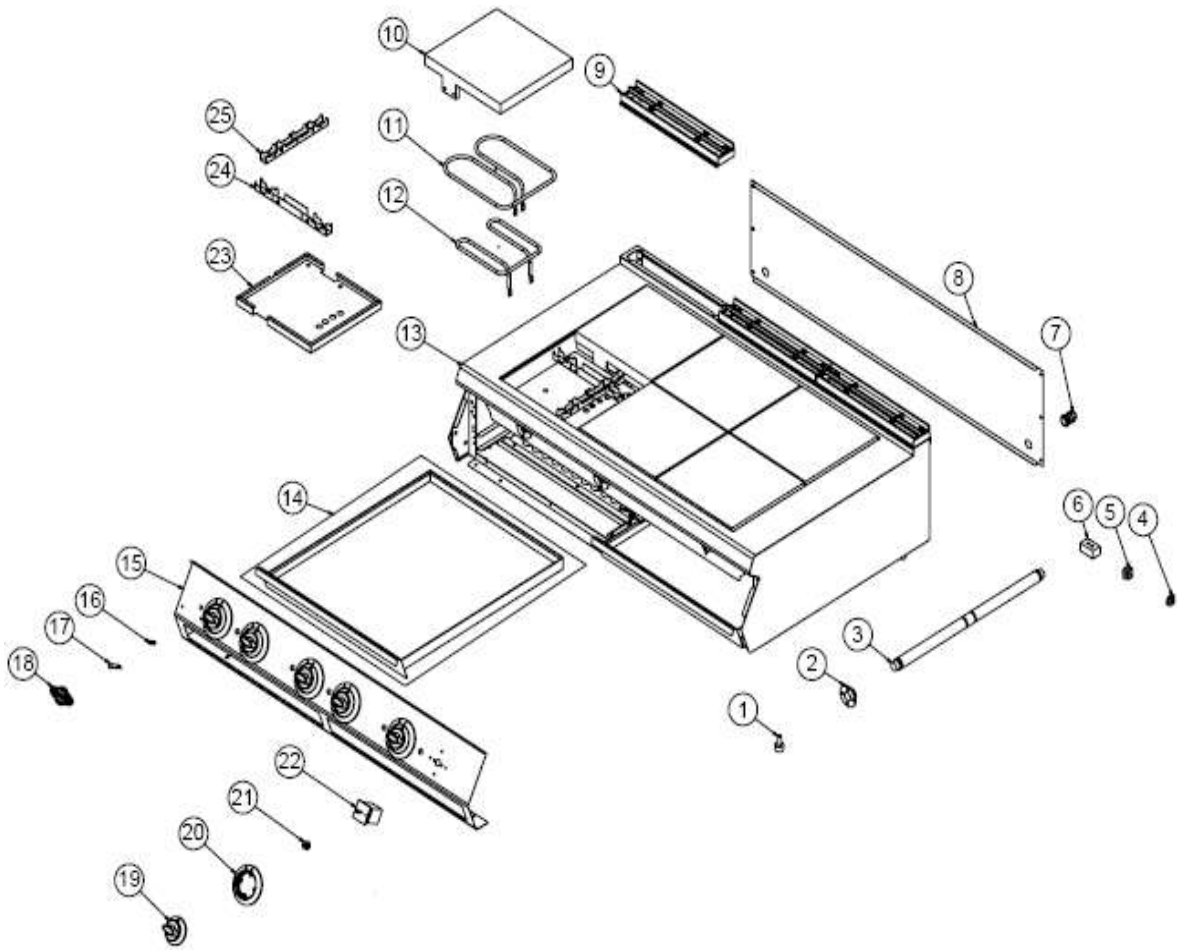

TATRA

ПЛИТА ЭЛЕКТРИЧЕСКАЯ 6 КОНФОРОЧНАЯ 900 СЕРИИ TATRA TER.129F

1	BUTTON SOCKET	JP.M.AKS-DGM-SKT-003	
2	0-1-2-3 BUTTON BUMPER	M.AKS-DGM-EMP-042	
3	BUTTON	M.AKS-DGM-EMP-024	
4	TICKET	M.AKS-OZL-MTL-006	
5	SIGNAL LAMP	M.ELK-LMB-SNY-002	
6	FRONT PANEL	YSC-KNX.PG9-LZ-1024	
7	M4 FRAME SPRING	M.YAY-PG-004	
8	Y90C393MK25 3*25 - SWITCH	JP.M.ELK-SLT-PKO-007	
9	DRAWER	ARA-KNX.PG9-0006	
10	CHASSIS	-	
11	INSULATION SHEET	YSC-KNX.PG9-LZ-1026	
12	COVER SHEET	YSC-KNX.PG9-LZ-1025	
13	RESISTANCE HOLDING SHEET-	YSC-KNX.PG7-LZ-1062	
14	RESISTANCE HOLDING SHEET-	YSC-KNX.PG7-LZ-1061	
15	380V-1000W RESISTANCE	M.ELK-RZS-BRU-IZG-017	
16	380V-1800W RESISTANCE	M.ELK-RZS-BRU-IZG-016	
17	RESISTANCE HOUSING	M.AKS-DKM-KZN-029	
18	40 CM X 7 CM CHIMNEY	JP.M.AKS-DKM-KZN-013	
19	BACK SHEET METAL	YSC-KNX.PG7-PN-0398	
20	PG-16 CABLE FITTING	JP.M.ELK-RKR-PLS-001	
21	MECHANISM SHAFT Ø30-755MM	YTL-KNX.PG9-KS-0015	
22	NO:2 25 MM TERMINAL	M.ELK-KLM-RKL-4*4-SRY	
23	TERMINAL	M.ELK-KLM-PRS-004	
24	TERMINAL	M.ELK-KLM-PRS-005	
25	MECHANISM BUSH	YTL-KNX.PG7-KS-0031	
26	M10*35 FOOT	JP.M.AKS-AYK-PLS-002	

TATRA